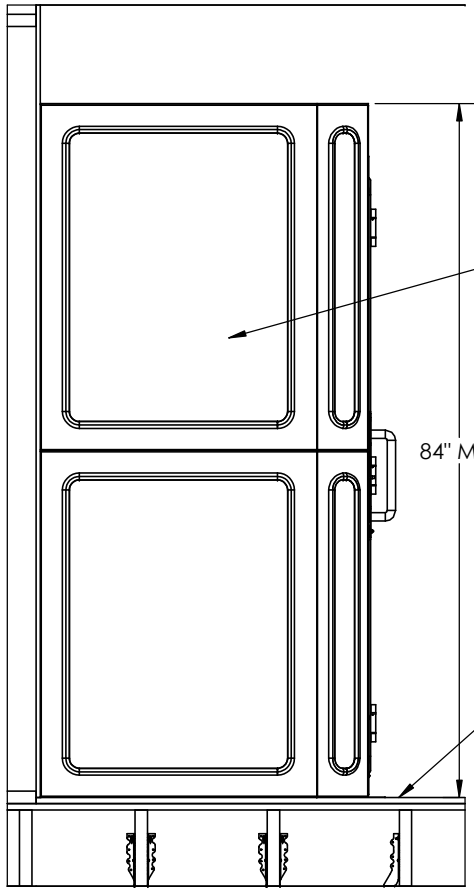

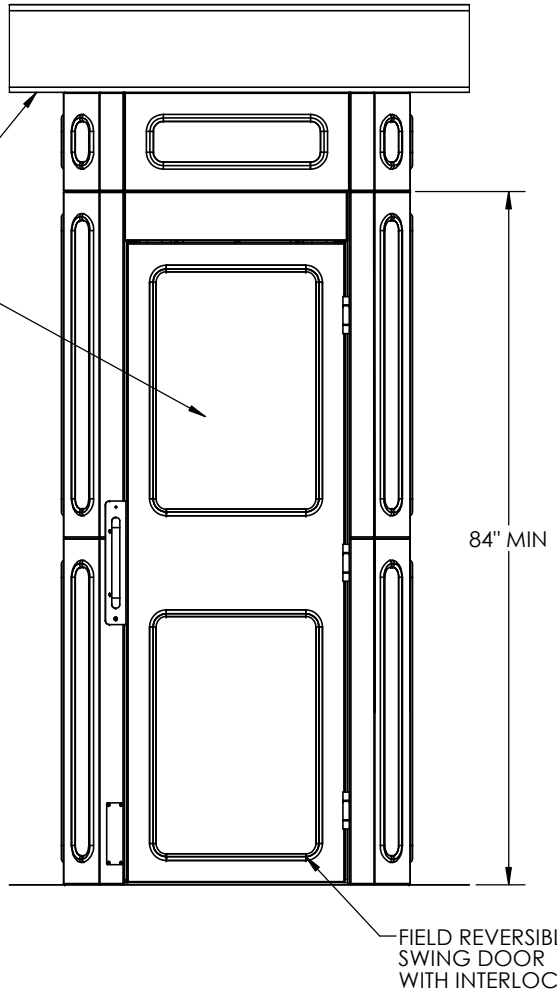

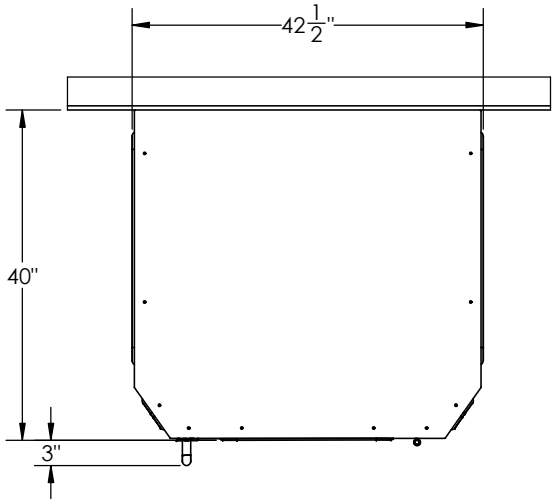

Features:

Battery Powered: 24 VDC Control System
Rated Load: 400 lbs
Speed: 8-10 fpm
Max. Travel: 14'-0"
Car Size: 33W x 26D x 75H
Overhead Clearance: 7'-0" Min.
Powder Coated Metal: Gray White
Vision Panels: Clear Acrylic
Car Light: Recessed LED
Telephone: Inside St. Stl. Telephone Cabinet

Automatic up/down controls
Key Lock on controls
Emergency Stop Switch and Alarm
Status LED
Winding Drum Drive with two 1/4" aircraft cables
Electromechanical Interlocks on Hoistway Doors
Two Grab Rails
Slack Cable Safety Device
Final Limit Switches
Wireless Hall Stations

PROPRIETARY AND CONFIDENTIAL

THE INFORMATION CONTAINED IN THIS DRAWING IS THE SOLE PROPERTY OF STAYING HOME CORPOTATION. ANY REPRODUCTION IN PART OR AS A WHOLE WITHOUT THE WRITTEN PERMISSION OF STAYING HOME CORPORATION IS PROHIBITED.

UNLESS OTHERWISE SPECIFIED:
DIMENSIONS ARE IN INCHES
TOLERANCES:
FRACTIONAL ±1/16
ANGULAR: ±0.5°
ONE PLACE DECIMAL ±0.1
TWO PLACE DECIMAL ±0.01
THREE PLACE DECIMAL ±0.005
INTERPRET GEOMETRIC TOLERANCING PER:
MATERIAL
FINISH
DO NOT SCALE DRAWING

	NAME	DATE
DRAWN		9/15/2016
CHECKED		
ENG APPR.		
MFG APPR.		
Q.A.		

COMMENTS:

STAYING HOME
Your Aging in Place Resource
Staying Home Corporation
2501 Anaconda Rd
Harrisonville, MO 64701
816-380-2427
www.stayinghome.com

TITLE: HOISTWAY ELEVATOR

SIZE	DWG. NO.	REV
B	SHC - HE3 TYP	

SCALE: 1:64 WEIGHT: SHEET 1 OF 1