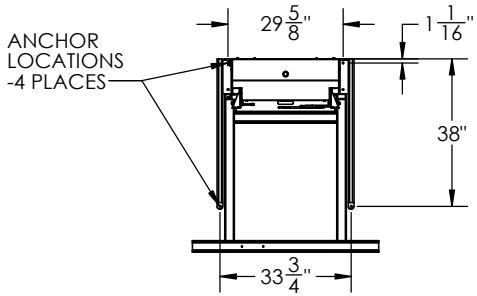

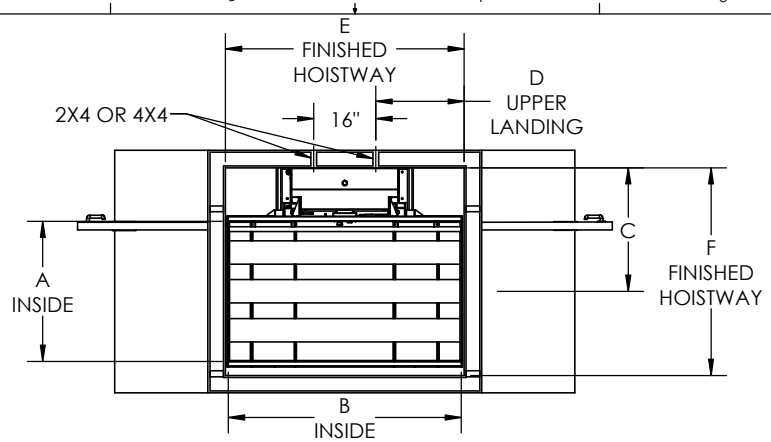

Specifications
Model: VL19
Rated Load: 750 lbs
Drive: Dual winding cable drums / 24 VDC
500 watt motor w/brake
Supply Power: 120 VAC 15A
Operating Power: 24 VDC (DUAL 12V 10AH BATTERIES)
Control Power: 5 VDC
Platform: 36" x 48" (36" x 54")(36" x 60")
(42" x 54")(42" x 60")
Lift Height: 1" - 144"
Speed: 15-18 fpm
Controls: Constant pressure
Safety Standards: ASME A18.1, Section 2
CSA B44.1/ASME A17.5
Safety Features: Safety pan, final limit, slack cable brake,
emergency stop w/alarm

PLATFORM SIZE	A	B	C	D	E	F
36X48	36-1/8	48	31-13/16	16-3/4	49-1/2	53-1/2
36X54	36-1/8	54	31-13/16	16-3/4	55-1/2	53-1/2
36X60	36-1/8	60	31-13/16	22-3/4	61-1/2	53-1/2
42X54	42-1/8	54	34-13/16	16-3/4	55-1/2	59-1/2
42X60	42-1/8	60	34-13/16	22-3/4	61-1/2	59-1/2

DIMESNIONS AND SPECIFICATIONS SUBJECT TO CHANGE

DESIGNED TO COMPLY
WITH ANSI A18.1 PART 2
WHEN PROPERLY INSTALLED

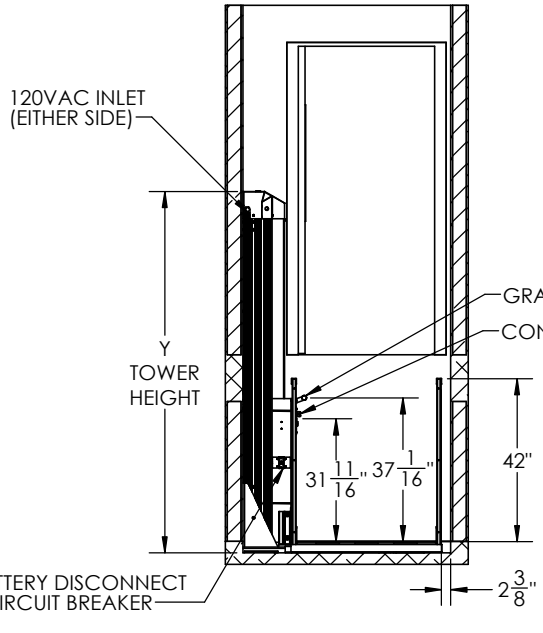

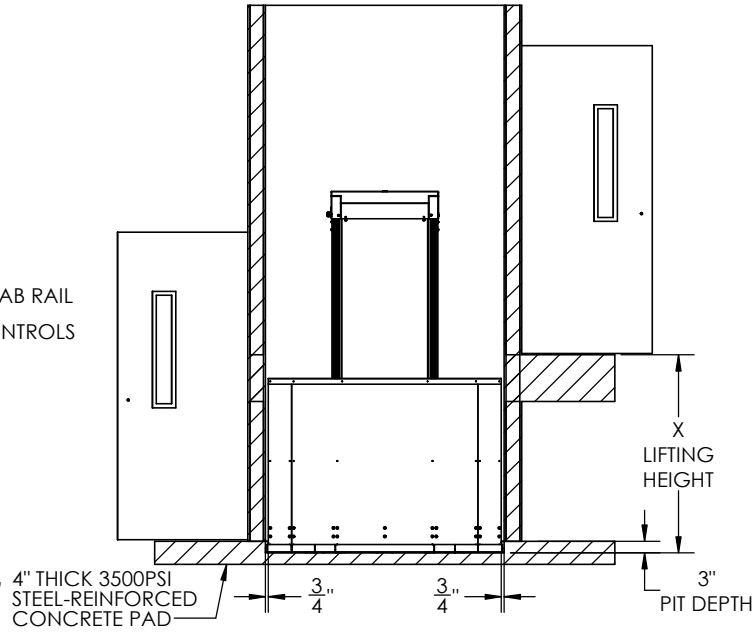

MODEL	X	Y
PLH-048	48	93-1/16
PLH-072	72	117-1/16
PLH-096	96	141-1/16
PLH-120	120	165-1/16
PLH-144	144	189-1/16

Staying Home Corporation
2501 Anaconda Rd
Harrisonville, MO 64701
816-380-2427
www.stayinghome.com

TITLE: PLATFORM LIFT - HOISTWAY STRAIGHT THRU PITTED

SIZE	DWG. NO.	REV
B	TYP-PLH-ST P	11/29 2021

SCALE: WEIGHT: SHEET 1 OF 1